SCHEMATIC	CONTENT	PAGE
TOP	COVER PAGE,PLACEMENT	1-2
FPGA	FPGA	3
POWER	DC5V to 3.3V,2.5V,1.8V,1.2V	4
Download	FPGA Download, ARM Download	5
INOUT	GPIO,LED,KEY,LVDS/MIPI	6

Copyright (c) 2018 by Gowin Semiconductor Corporation, Ltd

Title: DK-START-GW1NR9

Size: A3 | Document Number: COVER PAGE | Rev: V1.1

Date: Wednesday, Nov 28, 2018 | Sheet 1 of 6

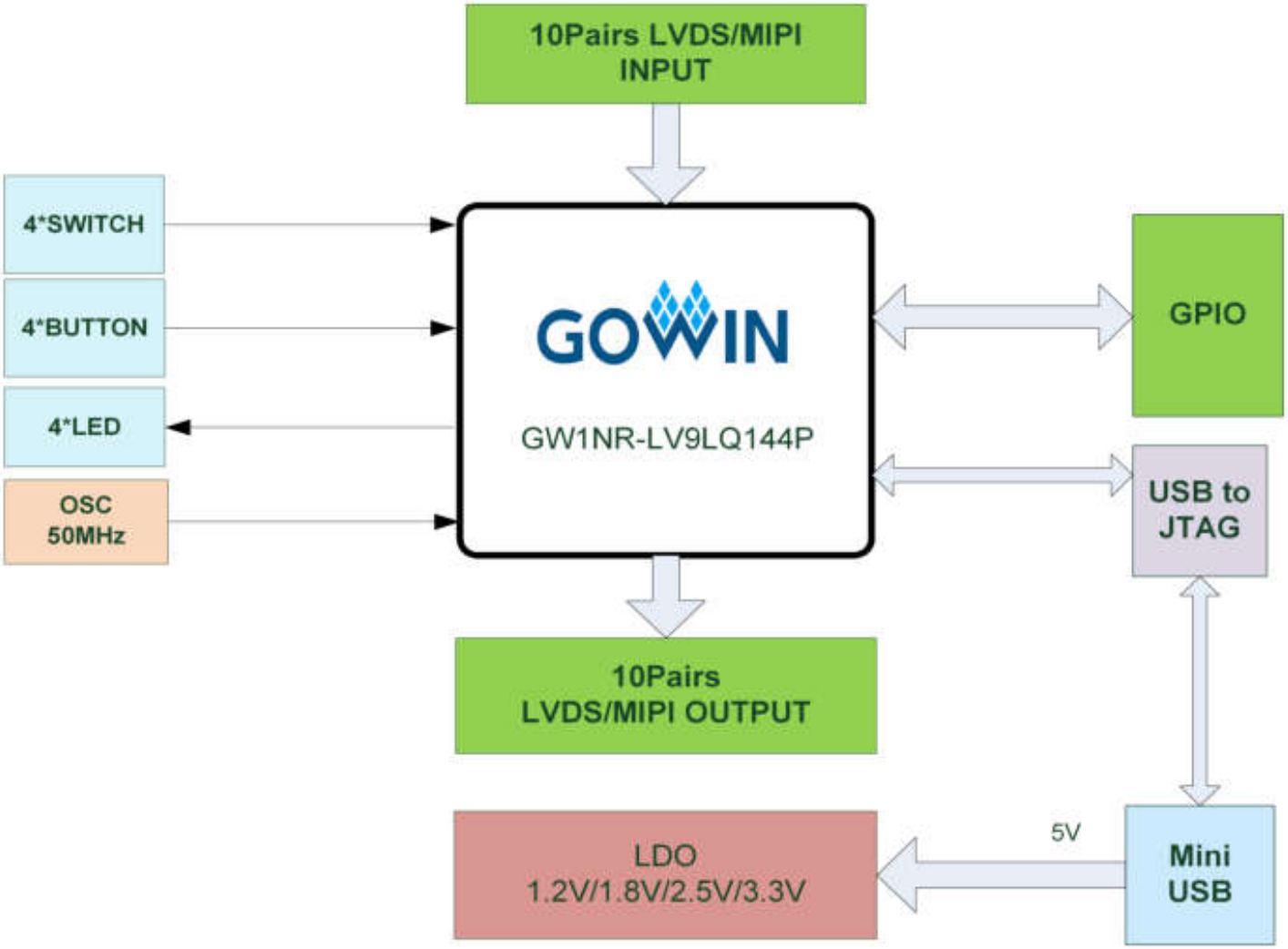

Copyright (c) 2018 by Gowin Semiconductor Corporation, Ltd

Title	DK-START-GW1NR9
Size A3	Document Number PLACEMENT
Rev	V1.1
Date:	Wednesday, Nov 28, 2018
Sheet	2 of 6

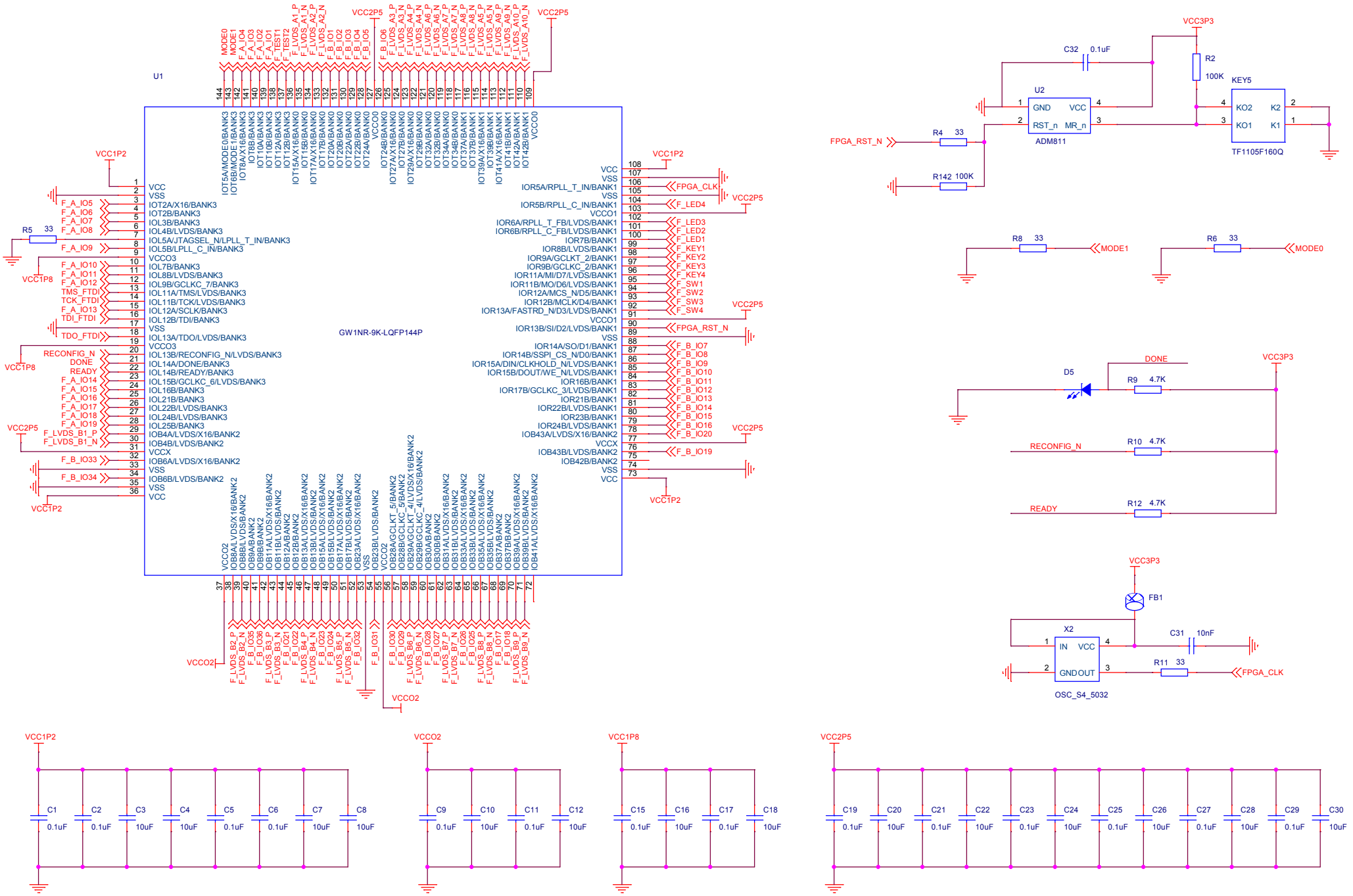

Copyright (c) 2018 by Gowin Semiconductor Corporation, Ltd

Title	DK-START-GW1NR9
Size A3	Document Number FPGA
Rev	V1.1
Date:	Wednesday, Nov 28, 2018
Sheet	3 of 6

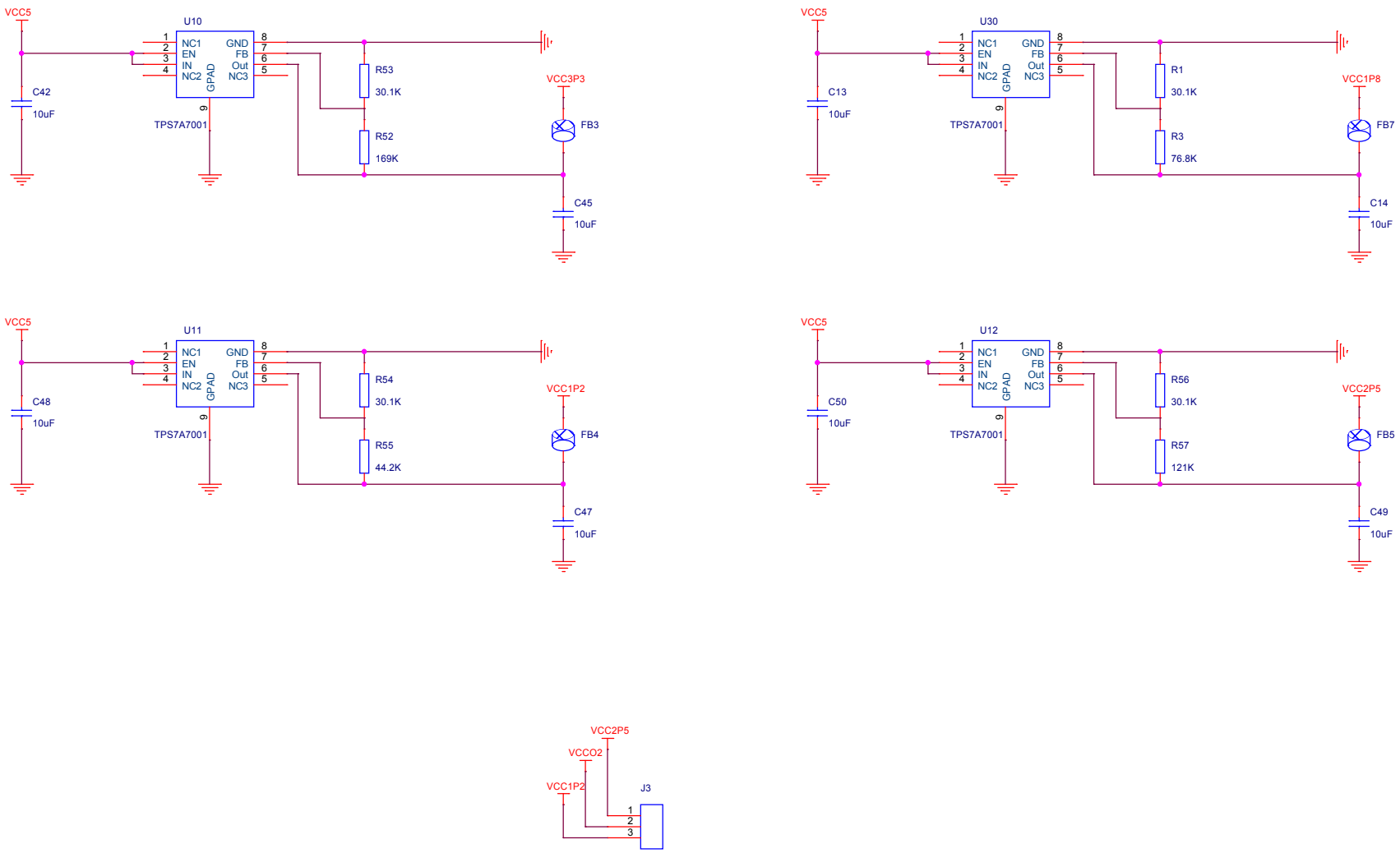

Copyright (c) 2018 by Gowin Semiconductor Corporation, Ltd

Title	DK-START-GW1NR9	
Size A3	Document Number 5V to 3.3V,2.5V,1.8V,1.2V	Rev V1.1
Date: Wednesday, Nov 28, 2018	Sheet 4 of 6	

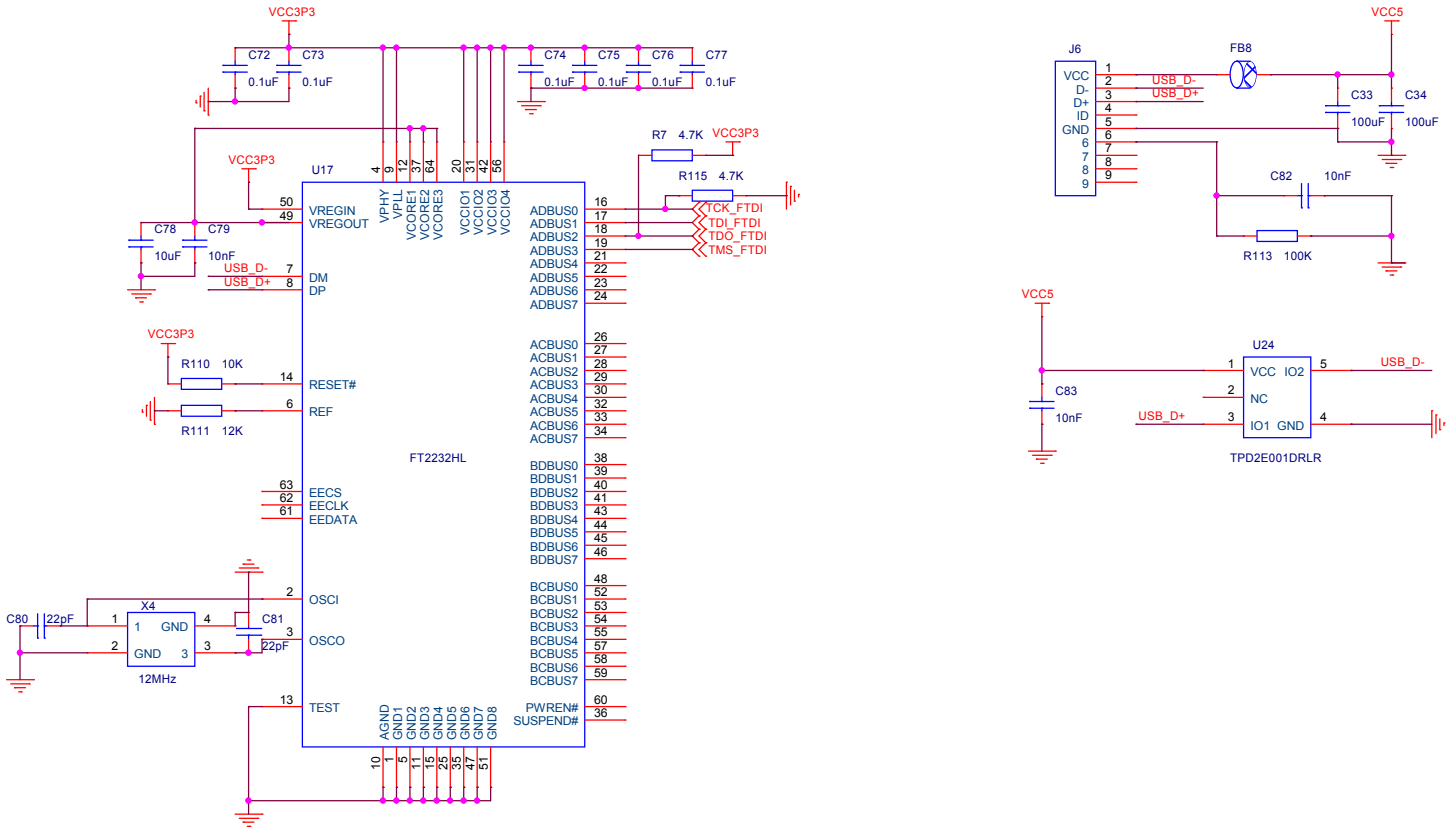

Copyright (c) 2018 by Gowin Semiconductor Corporation, Ltd

Title	DK-START-GW1NR9
Size A3	Document Number: Download
Rev	V1.1
Date:	Wednesday, Nov 28, 2018
Sheet	5 of 6

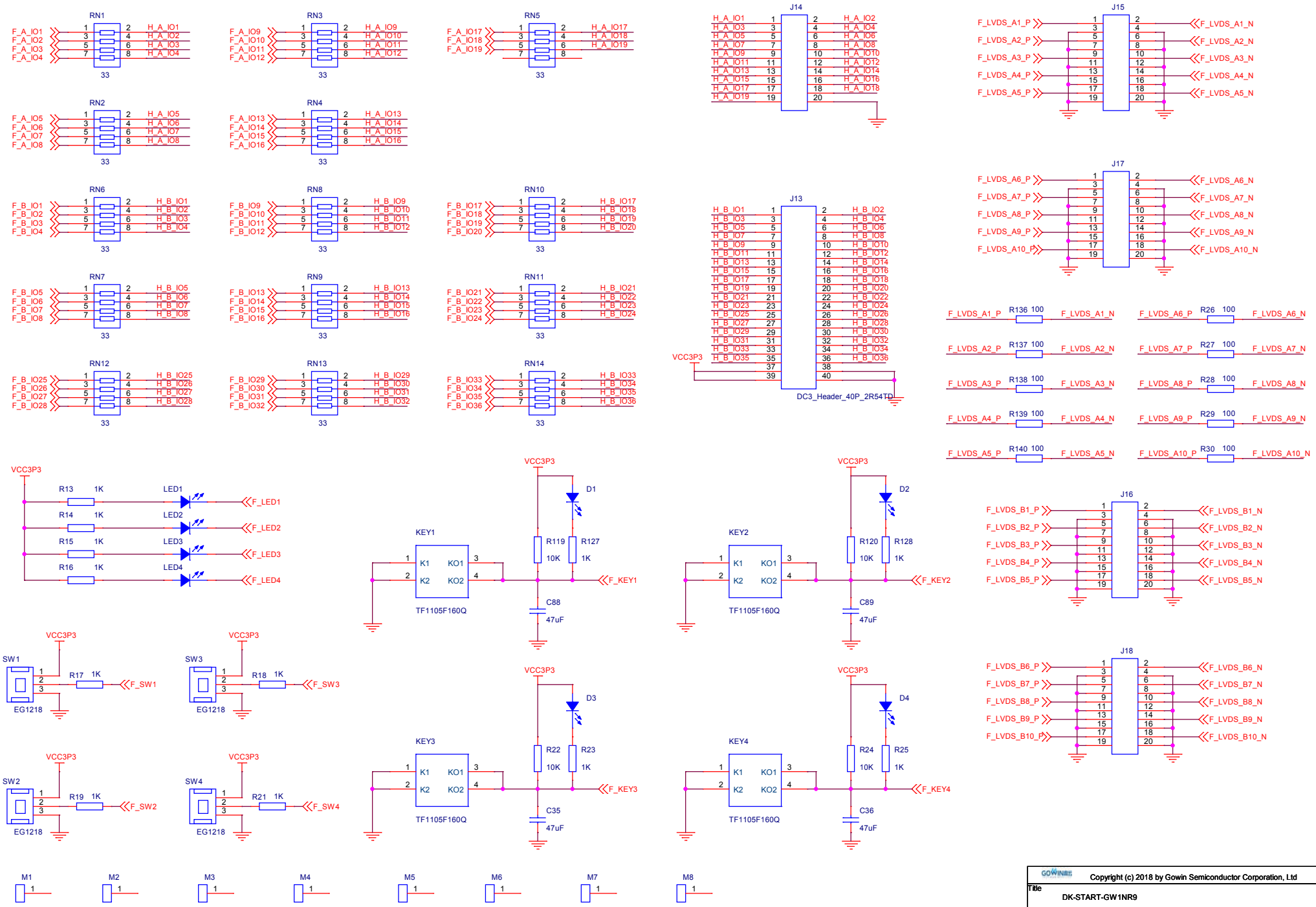

Copyright (c) 2018 by Gowin Semiconductor Corporation, Ltd

Title	DK-START-GW1NR9
Size A3	Document Number GPIO,LED,KEY,LVDS/MIPI
Rev	V1.1
Date:	Wednesday, Nov 28, 2018
Sheet	6 of 6