GW2ANR-LV18-QFN88

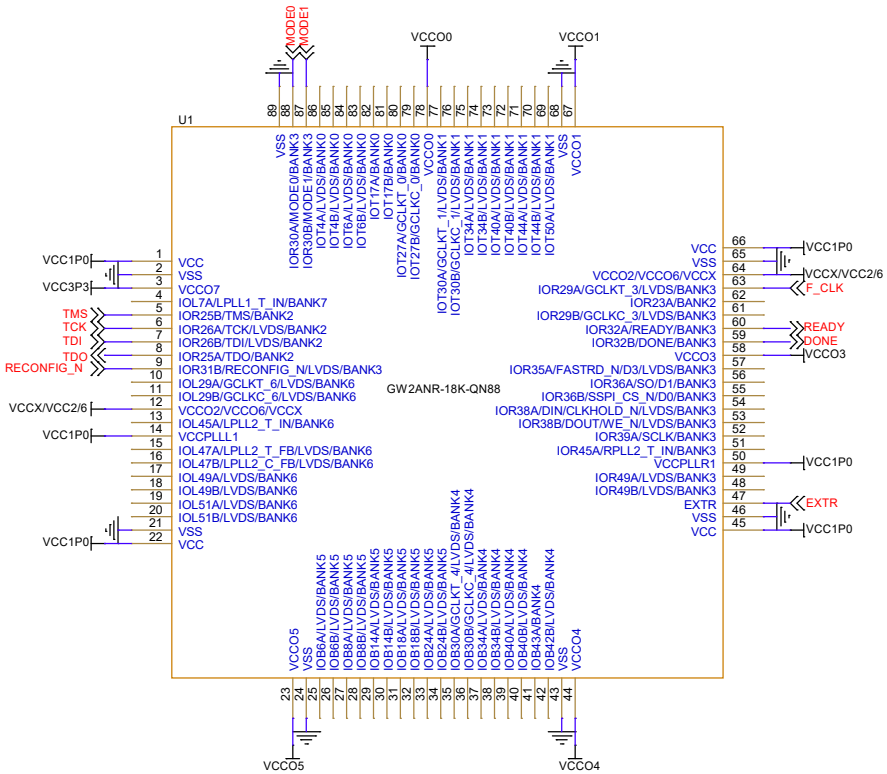

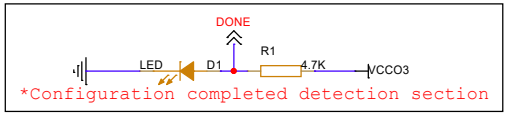

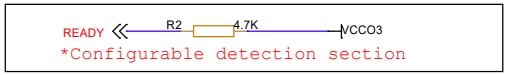

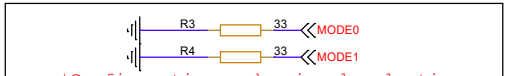

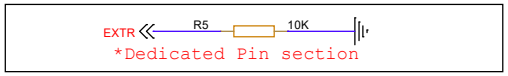

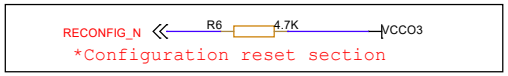

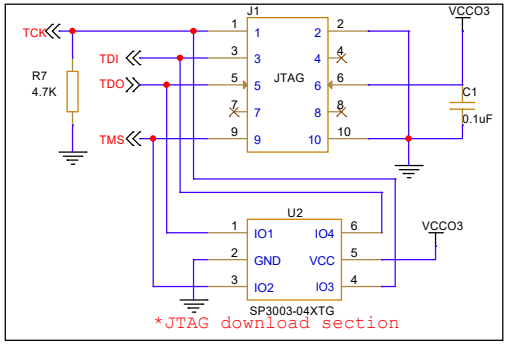

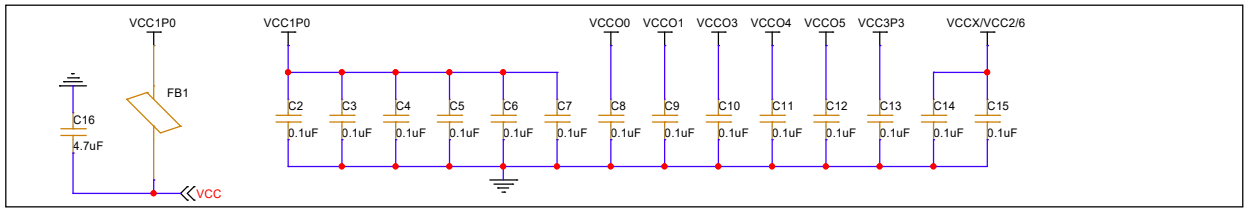

Title	GOWIN Minimum System Diagram	
Size A3	Document Number GW2ANR-LV18-QFN88	Rev 1.1
Date: Friday, February 03, 2023	Sheet 1 of 1	