GW1N-LV1S-FN32

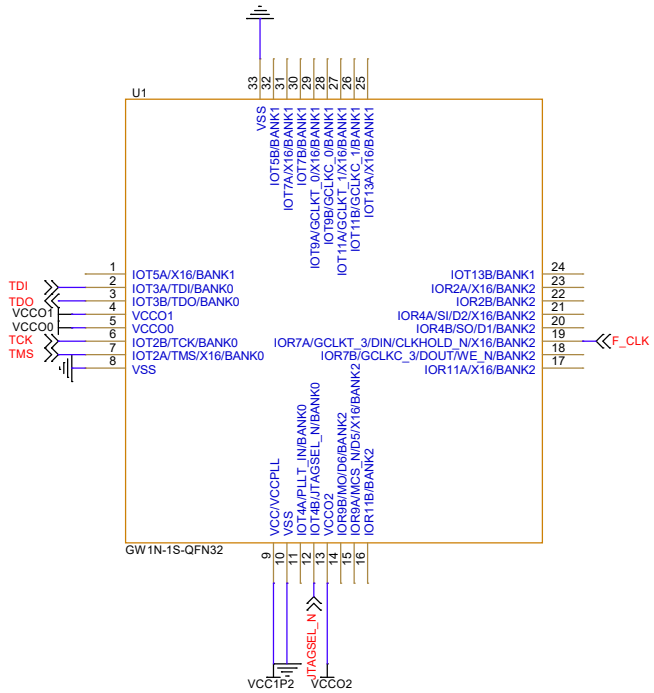

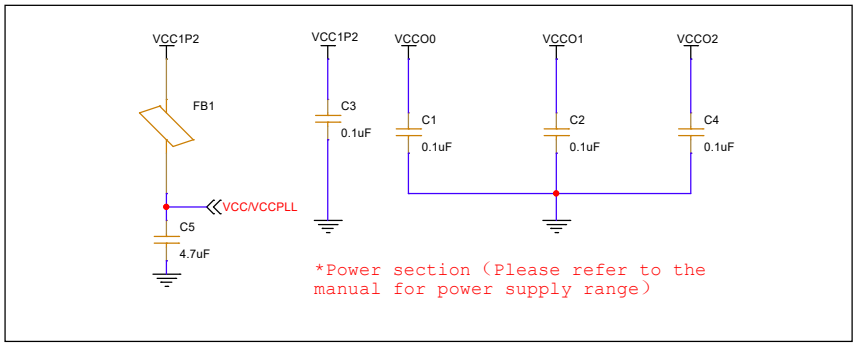

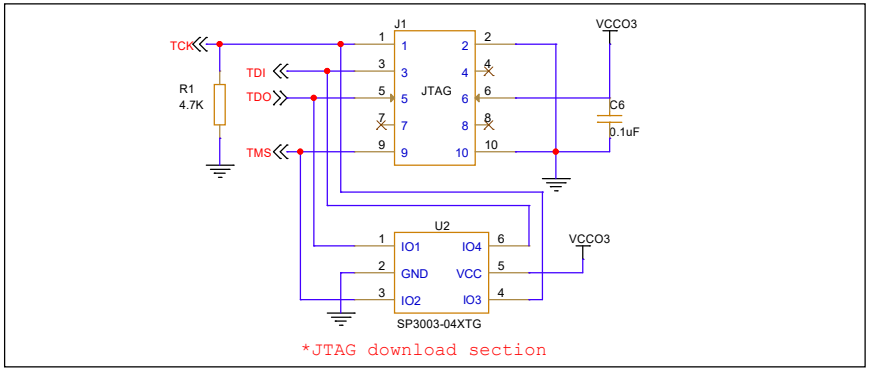

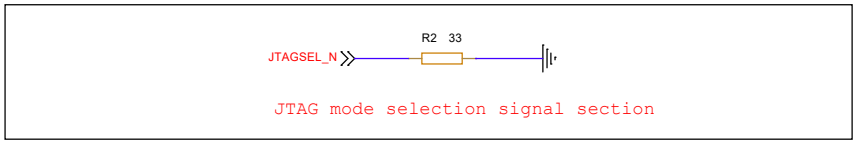

Title	GOWIN Minimum System Diagram	
Size A3	Document Number GW1N-LV1S-FN32	Rev 1.1
Date: Thursday, February 02, 2023	Sheet 1 of 2	

GW1N-LV1S-CS30

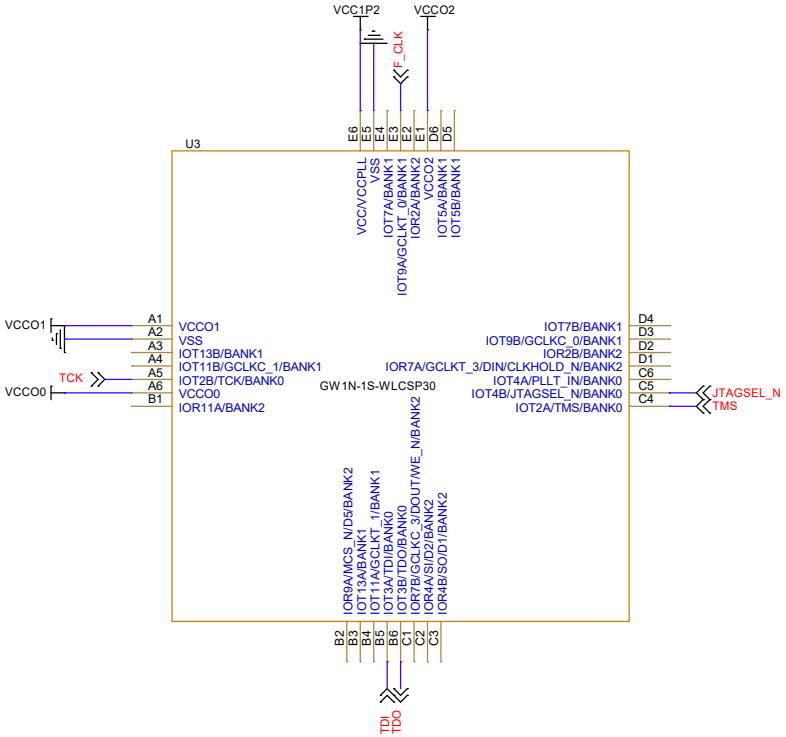

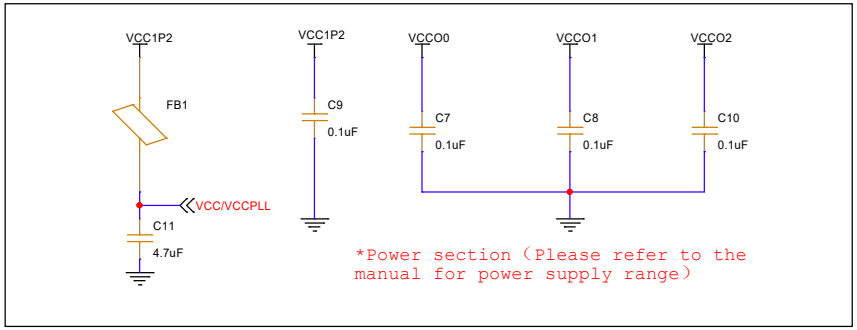

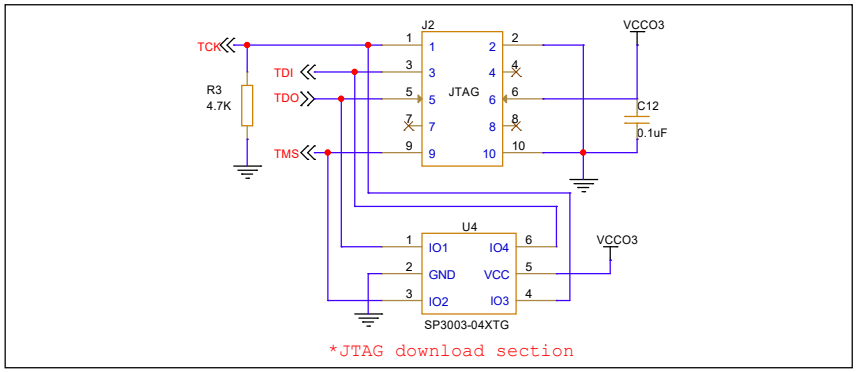

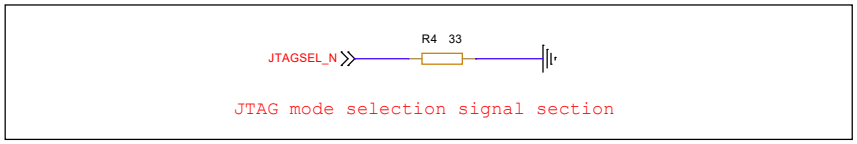

Title	GOWIN Minimum System Diagram	
Size A3	Document Number GW1N-LV1S-CS30	Rev 1.1
Date: Thursday, February 02, 2023	Sheet 2 of 2	