GW1NR-LV1K-EQ144G

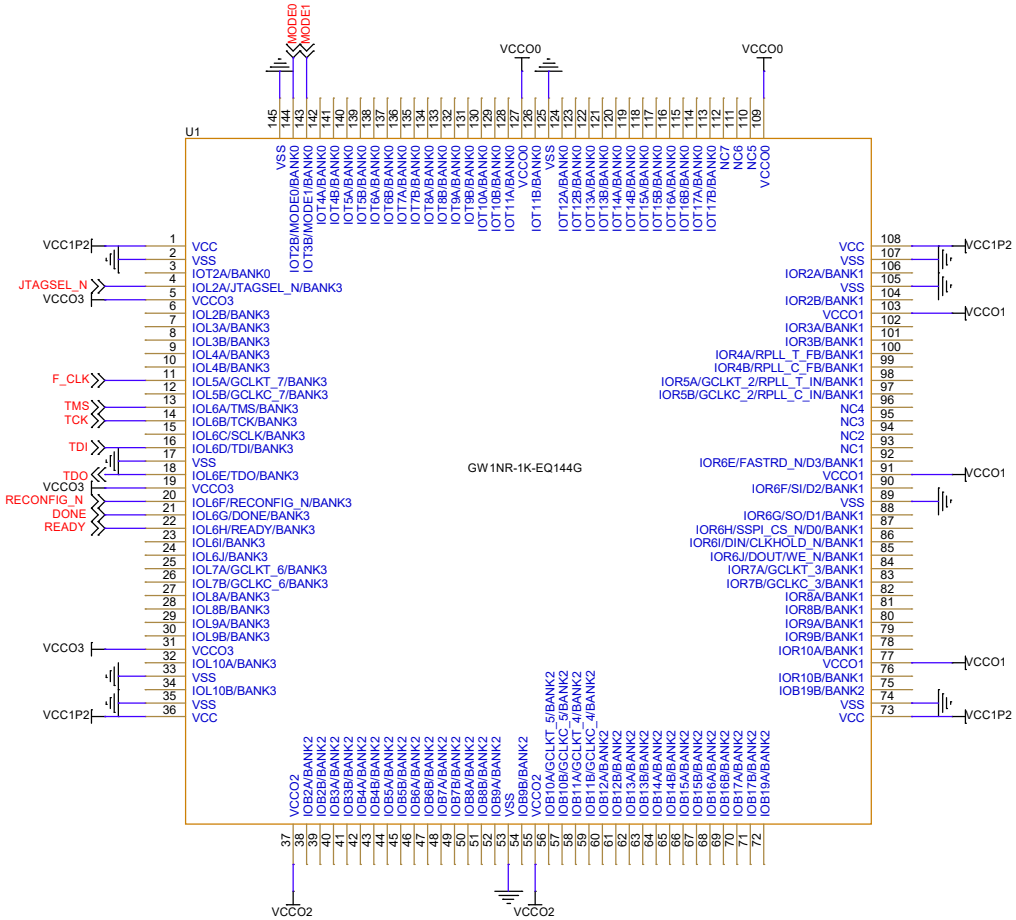

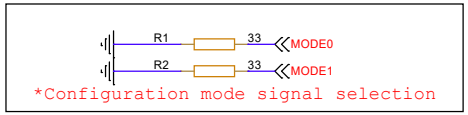

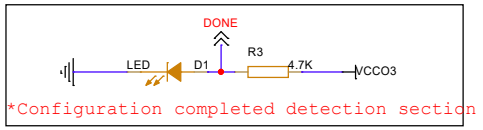

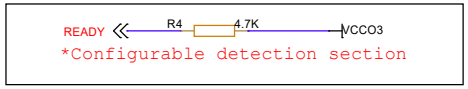

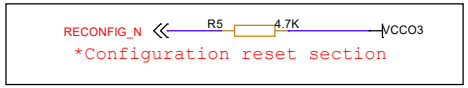

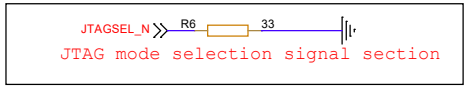

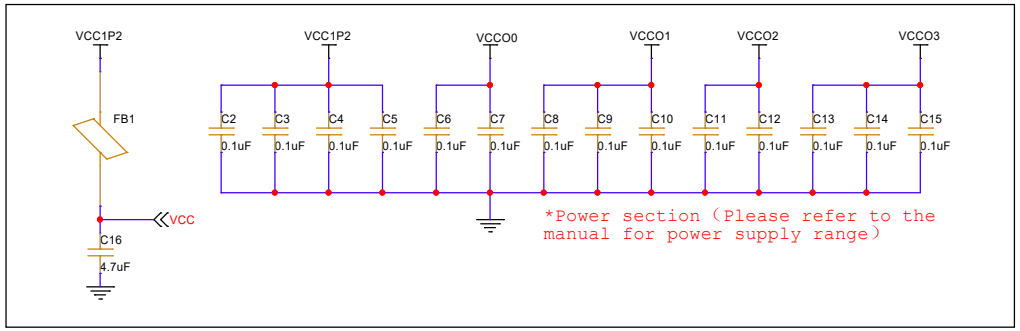

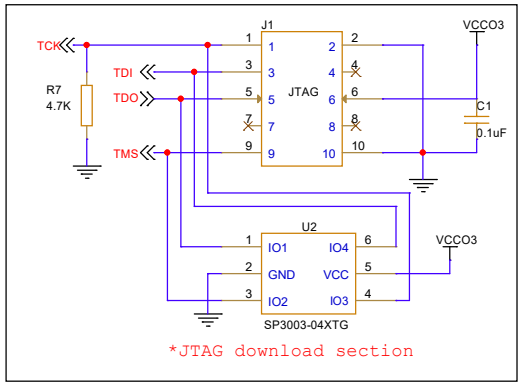

Title	GOWIN Minimum System Diagram	
Size A3	Document Number GW1NR-LV1K-EQ144G	Rev V1.2
Date: Friday, February 03, 2023	Sheet 1 of 5	

GW1NR-LV1K-FN32G

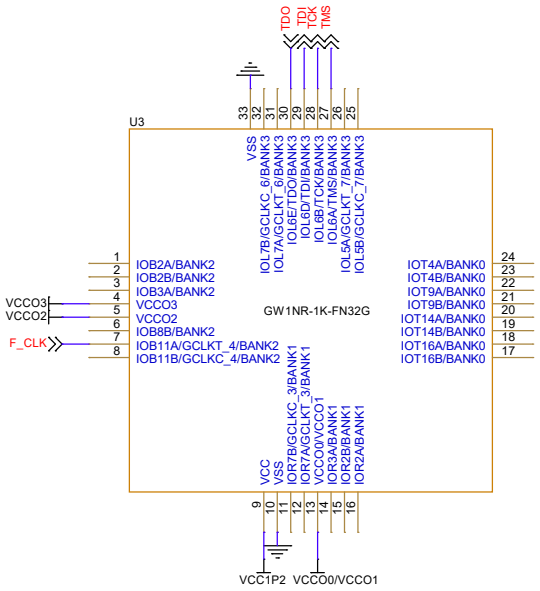

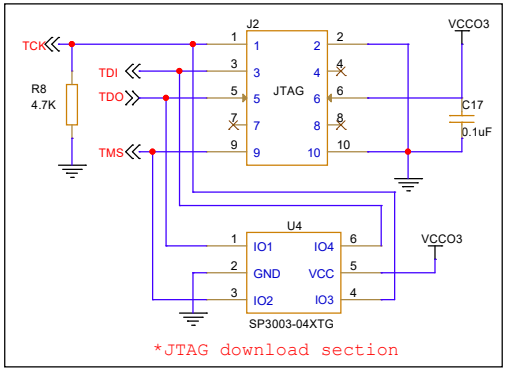

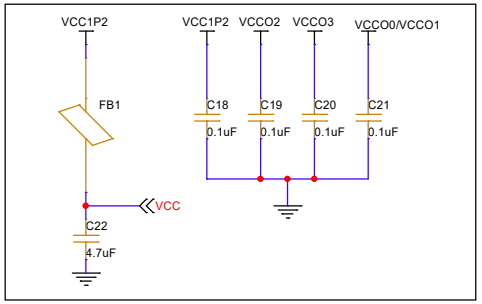

Title	GOWIN Minimum System Diagram	
Size A3	Document Number GW1NR-LV1K-FN32G	Rev V1.2
Date: Friday, February 03, 2023	Sheet 2 of 5	

GW1NR-LV1K-LQ100G

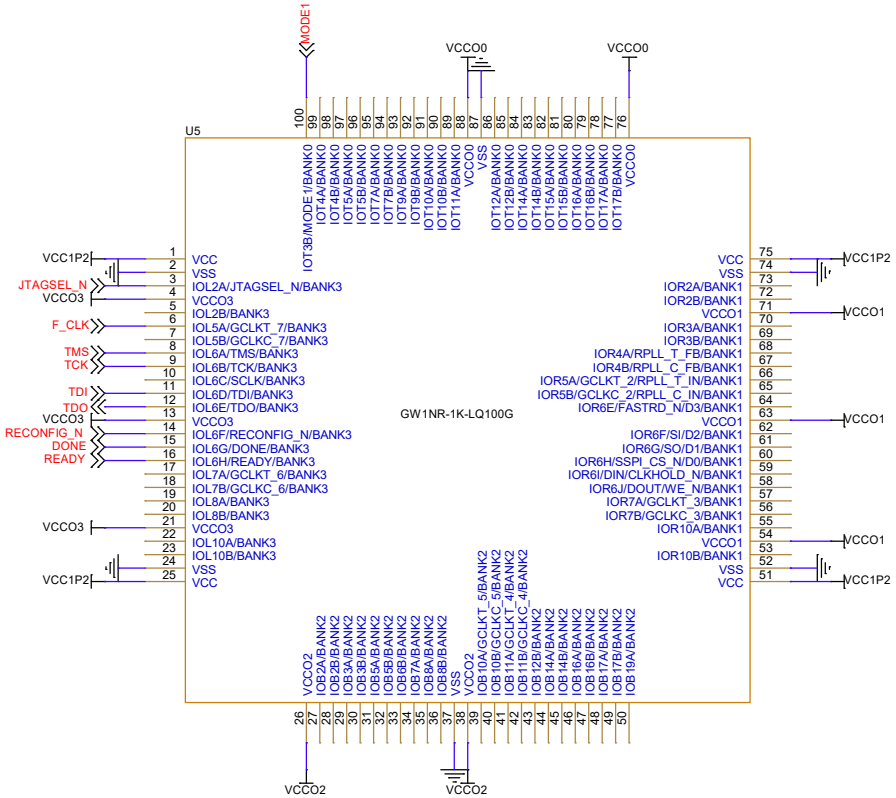

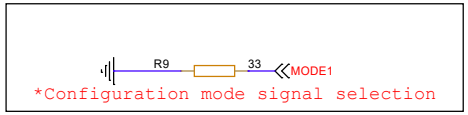

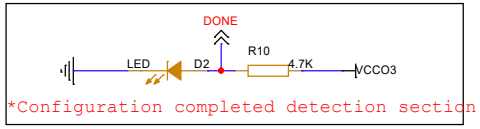

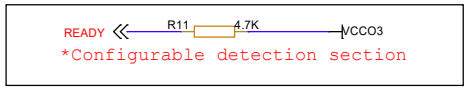

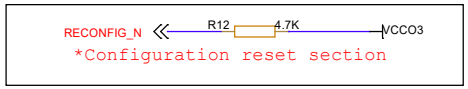

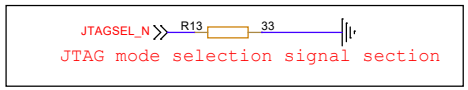

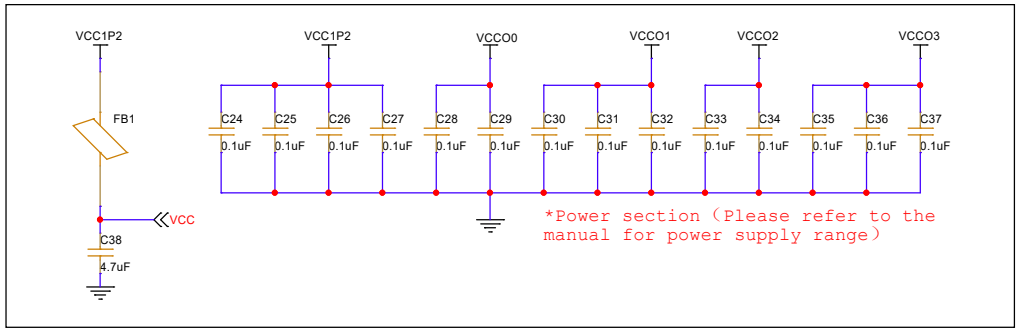

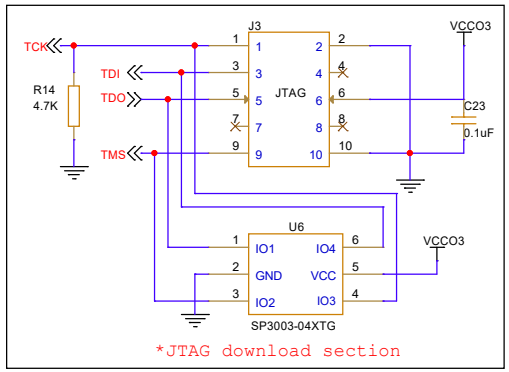

Title	GOWIN Minimum System Diagram	
Size A3	Document Number GW1NR-LV1K-LQ100G	Rev V1.2
Date: Friday, February 03, 2023	Sheet 3 of 5	

GW1NR-LV1K-QN32X

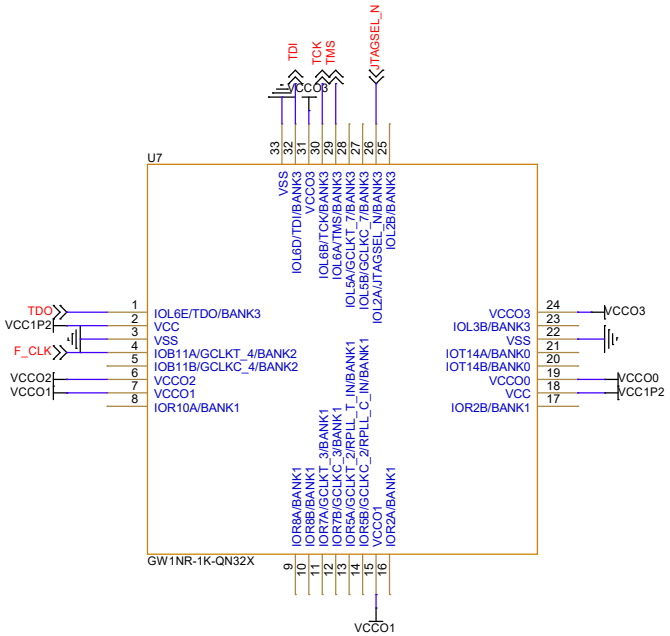

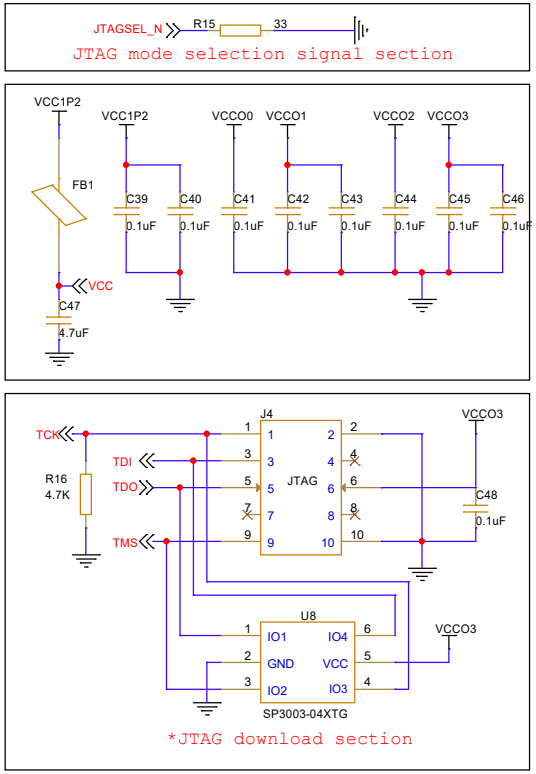

Title	GOWIN Minimum System Diagram	
Size A3	Document Number GW1NR-LV1K-QN32X	Rev V1.2
Date: Friday, February 03, 2023	Sheet 4 of 5	

GW1NR-LV1K-QN48X

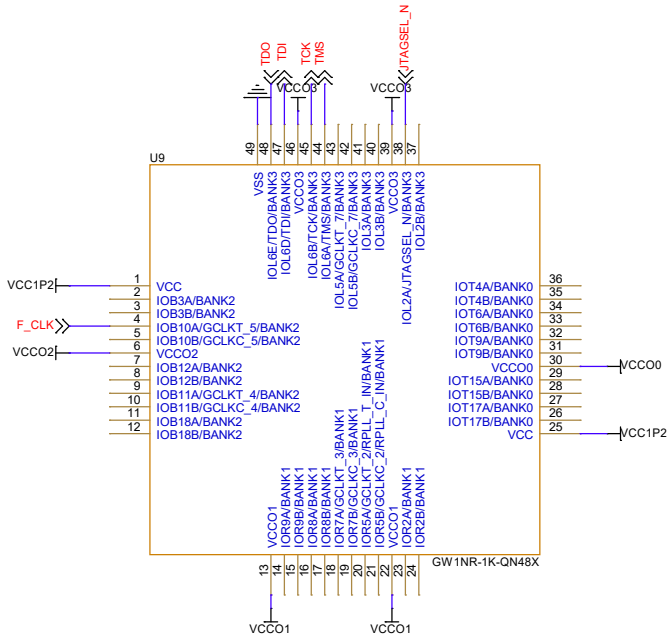

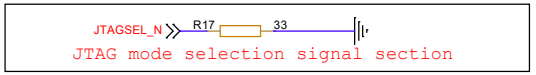

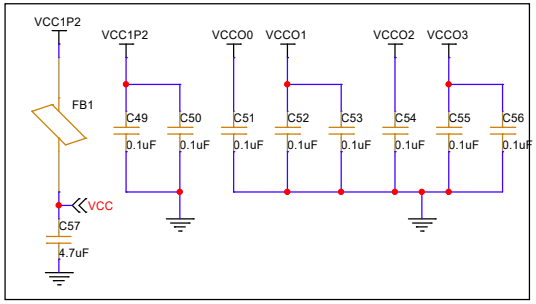

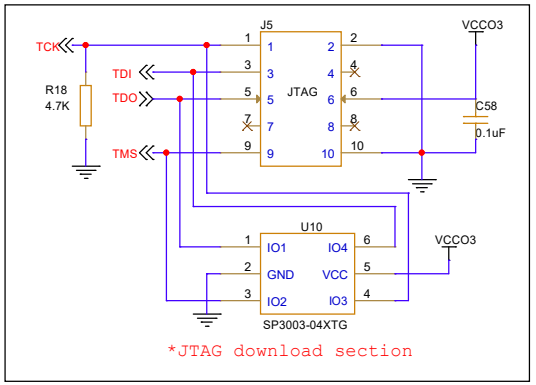

Title	GOWIN Minimum System Diagram	
Size A3	Document Number GW1NR-LV1K-QN48X	Rev V1.2
Date: Friday, February 03, 2023	Sheet 5 of 5	