GW1NSER-LV4C-QFN48G

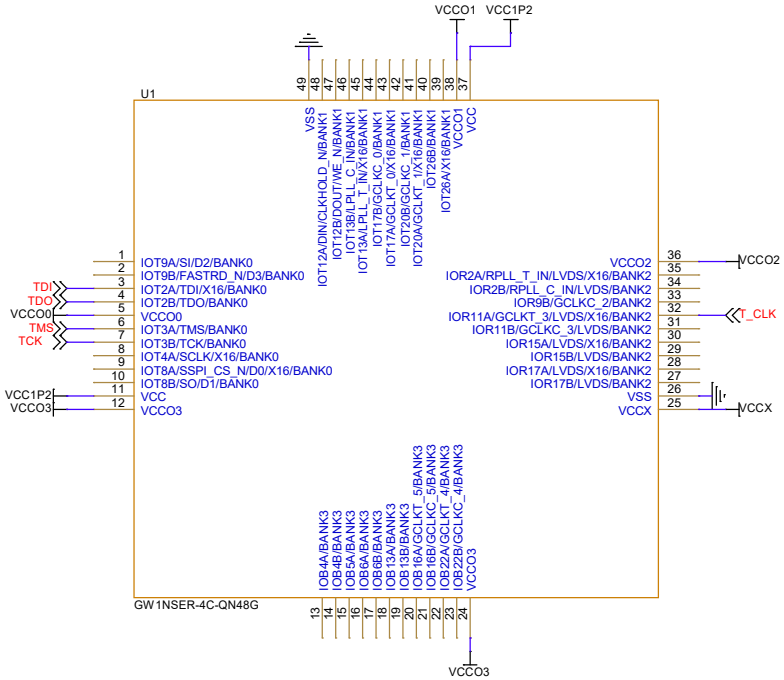

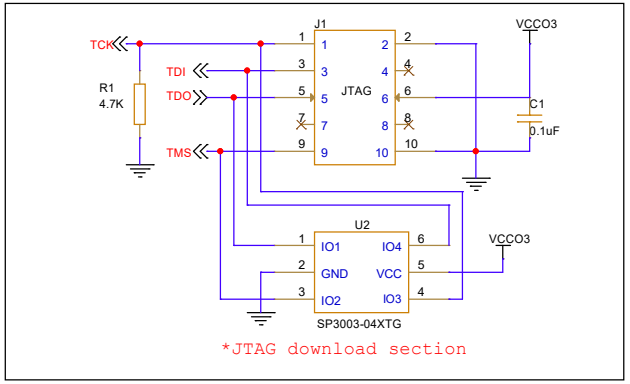

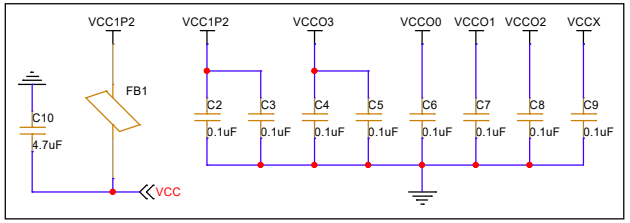

Title	GOWIN Minimum System Diagram	
Size A3	Document Number GW1NSER-LV4C-QFN48G	Rev 1.1
Date: Friday, February 03, 2023	Sheet 1 of 2	

GW1NSER-LV4C-QFN48P

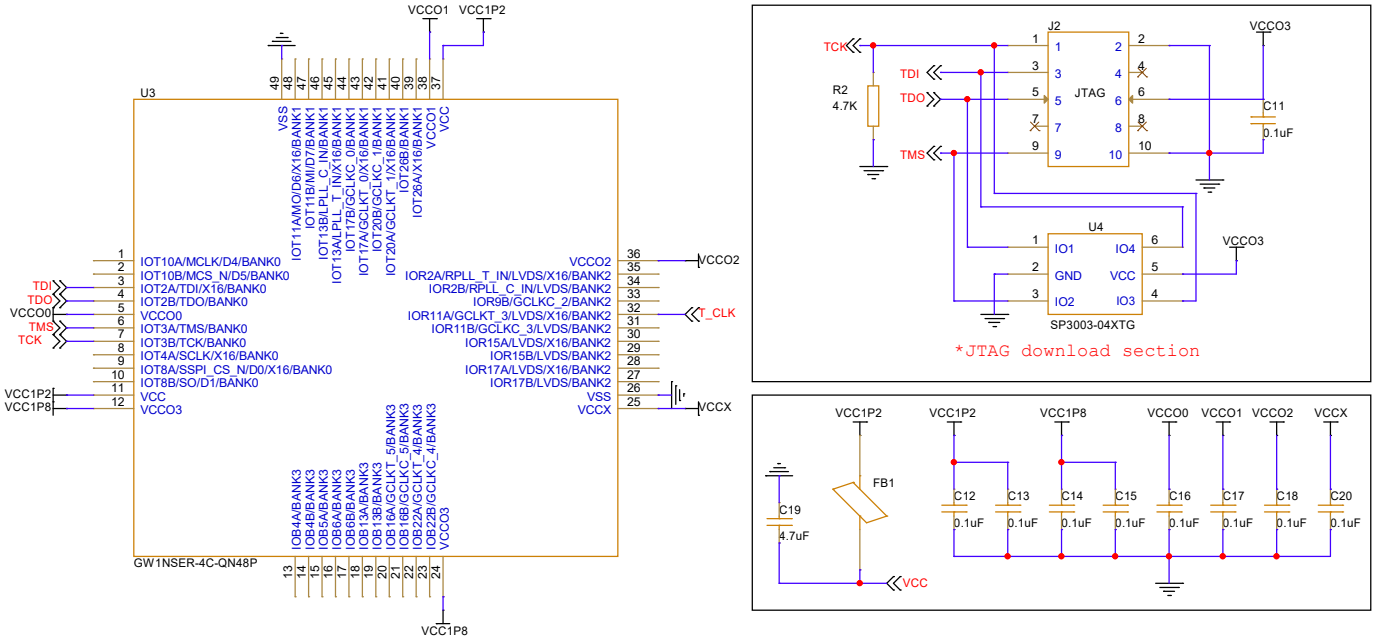

Title	GOWIN Minimum System Diagram
Size A3	Document Number GW1NSER-LV4C-QFN48P
Rev	1.1
Date:	Friday, February 03, 2023
Sheet	2 of 2