GW1NSR-LV4K-MBGA64P

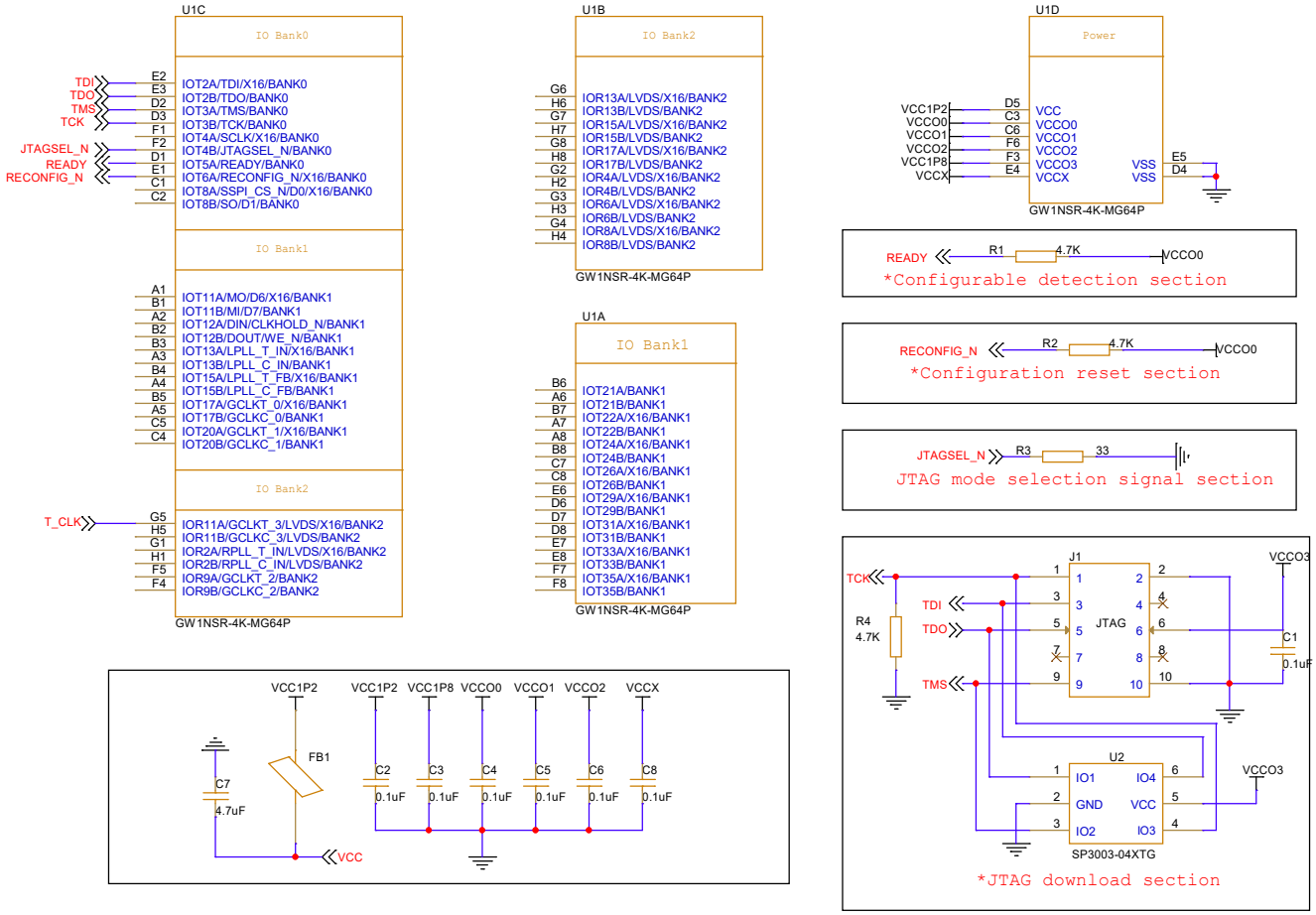

Title	GOWIN Minimum System Diagram	
Size A3	Document Number GW1NSR-LV4K-MBGA64P	Rev 1.1
Date: Friday, February 03, 2023	Sheet 1 of 1	